UNIVERSITY OF BIRMINGHAM
University of Birmingham Research at Birmingham

State of charge-based power sharing algorithm for hydrogen and battery cells supplying double-three phase permanent magnet synchronous motor

Polater, Nursaid; Kamel, Tamer; Tricoli, Pietro

DOI:
10.1109/CPE-POWERENG54966.2022.9880897

License:
Other (please specify with Rights Statement)

Document Version
Peer reviewed version

Citation for published version (Harvard):
Polater, N, Kamel, T & Tricoli, P 2022, State of charge-based power sharing algorithm for hydrogen and battery cells supplying double-three phase permanent magnet synchronous motor. in *2022 IEEE 16th International Conference on Compatibility, Power Electronics, and Power Engineering (CPE-POWERENG).* vol. 2022, Compatibility in power electronics, Institute of Electrical and Electronics Engineers (IEEE), 16th International Conference on Compatibility, Power Electronics and Power Engineering, Birmingham, United Kingdom, 29/06/22. https://doi.org/10.1109/CPE-POWERENG54966.2022.9880897

Link to publication on Research at Birmingham portal

Publisher Rights Statement:
This is the authors' accepted manuscript (AAM) for an article published in 2022 IEEE 16th International Conference on Compatibility, Power Electronics, and Power Engineering (CPE-POWERENG) by IEEE as 10.1109/CPE-POWERENG54966.2022.9880897

© 2022 IEEE. Personal use of this material is permitted. Permission from IEEE must be obtained for all other uses, in any current or future media, including reprinting/republishing this material for advertising or promotional purposes, creating new collective works, for resale or redistribution to servers or lists, or reuse of any copyrighted component of this work in other works.

General rights
Unless a licence is specified above, all rights (including copyright and moral rights) in this document are retained by the authors and/or the copyright holders. The express permission of the copyright holder must be obtained for any use of this material other than for purposes permitted by law.

•Users may freely distribute the URL that is used to identify this publication.
•Users may download and/or print one copy of the publication from the University of Birmingham research portal for the purpose of private study or non-commercial research.
•User may use extracts from the document in line with the concept of 'fair dealing' under the Copyright, Designs and Patents Act 1988 (?)
•Users may not further distribute the material nor use it for the purposes of commercial gain.

Where a licence is displayed above, please note the terms and conditions of the licence govern your use of this document.

When citing, please reference the published version.

Take down policy
While the University of Birmingham exercises care and attention in making items available there are rare occasions when an item has been uploaded in error or has been deemed to be commercially or otherwise sensitive.

If you believe that this is the case for this document, please contact UBIRA@lists.bham.ac.uk providing details and we will remove access to the work immediately and investigate.

Download date: 25. Jun. 2024

State of Charge-Based Power Sharing Algorithm for Hydrogen and Battery Cells Supplying Double-Three Phase Permanent Magnet Synchronous Motor

Nursaid Polater
Department of Electronic, Electrical and Computer Engineering
University of Birmingham
Birmingham, UK
nxp857@student.bham.ac.uk

Tamer Kamel
Department of Electronic, Electrical and Computer Engineering
University of Birmingham
Birmingham, UK
t.kamel@bham.ac.uk

Pietro Tricoli
Department of Electronic, Electrical and Computer Engineering
University of Birmingham
Birmingham, UK
p.tricoli@bham.ac.uk

***Abstract*—This paper presents a new power sharing algorithm for a hybrid power source of hydrogen fuel cells (HFC) and Li-ion battery cells (LiBC) based on state of charge (SOC) of the LiBC to supply a dual three-phase machine in light railways. HFCs are good energy sources to provide reliable power at a steady rate, while, LiBC have fast dynamics that can respond appropriately to the fast load transients. Double three phase permanent magnet synchronous machines (DTPMSM) have been nominated in this research since they provide high reliability in which the fault-tolerant operation can be implemented. Additionally, they provide lower power losses and harmonic distortion along with higher power density. Accordingly, this paper establishes a new SOC -based power sharing algorithm to employ the two power sources to supply DTPMSM. The average traction demand along with the SOC of the LiBC are used as two main inputs for the proposed approach. The system under study has been modelled and evaluated in the Typhoon HIL real time simulator. Comparative analysis is demonstrated at the end of the paper to validate the proposed algorithm.**

Keywords—Hydrogen fuel cells, Li-ion battery, SOC, DTPMSM, Power Sharing.

I. INTRODUCTION

Hydrogen fuel cells have been presented as great candidate to replace other powertrain technologies in rail transportation. They offer reduced or zero emission options for rail transportation in various applications currently powered with diesel engines or liquefied natural gas (LNG) powered trains [1]. Moreover, they are better alternatives to power the trains in light railway network instead of development of a dedicated electrical grid to supply the railway network and this requires upgrading infrastructure of the distribution electrical network and involves more costs.

On the other hand, the traction demands of the railway network are characterized by their rapid variations depending on the trains' operational conditions and timetables. Besides, even though HFC are good energy sources to provide reliable power at a steady rate, they cannot respond appropriately to the tractions' fast load transients due to their slow internal electrochemical and thermodynamic responses [2]. Alternatively, they can be integrated with energy storage device with fast dynamics such as Li-ion battery cells (LiBC) to form a hybrid power source for traction systems.

Hence, fuel cell with battery systems could be utilized more effectively as hybrid traction system. For an example configuration, battery unit can be connected parallel to fuel cell and provides energy during start up, and demand of acceleration as well as can store energy during the regenerative braking. Fuel cell is designed for the average power demand of the train, while battery is designed for peak power and regenerative braking in the most cases [3].

On the other hand, dual three-phase machines have been recently considered as attractive and vital application in various traction systems such as electric ship propulsion, locomotive traction, electric vehicles (EVs), and aircraft [4-5]. This is because they provide more reliable operation and tolerable to fault than the conventional three-phase machines [6]. Additionally, they offer higher power density, lower torque ripple, lower harmonic distortion, and higher efficiency [6-7].

Accordingly, a new power sharing approach, for independently supplying the two windings of the DTPMSM, is investigated in this research study for light railway applications. Fuel cell and battery sources are modelled and utilized as modular energy sources for each three-phase groups. Then, the proposed power sharing scheme is developed. Eventually, investigating the system performance under new control algorithm along with discussing the controllability and complexity of strategies for high power DTPMSMs are provided at the end of the paper.

The paper is organized as follows: the new power sharing proposal to distribute the demanded traction power over the two power sources is presented in section II. Then, section III demonstrates the system modelling and evaluation using Typhoon HIL real time simulator. Finally, discussions and conclusions on the system performance and effectiveness are given in section IV.

II. NEW POWER SPLITTING ALGORITHM

A power sharing strategy based on the rated power of one of DC power supply has been proposed in [8]. This approach is updated in this presented paper by employing both rated powers of fuel cell (P_{FC})and battery (P_B) as well as the traction power ($P_{traction}$) and the state of charge of the battery to perform more effective and reliable power sharing management between the two power sources, as illustrated in Fig.1. Firstly, the demanded power from the fuel cell (FC) is designed for the average power of the train, while, the battery power capacity is then designed for the peak and high power demands. Accordingly, single train simulator (STS) has been developed by Birmingham Centre for Railway Research & Education (BCRRE) to find the average demand power of a train under study within the certain route.

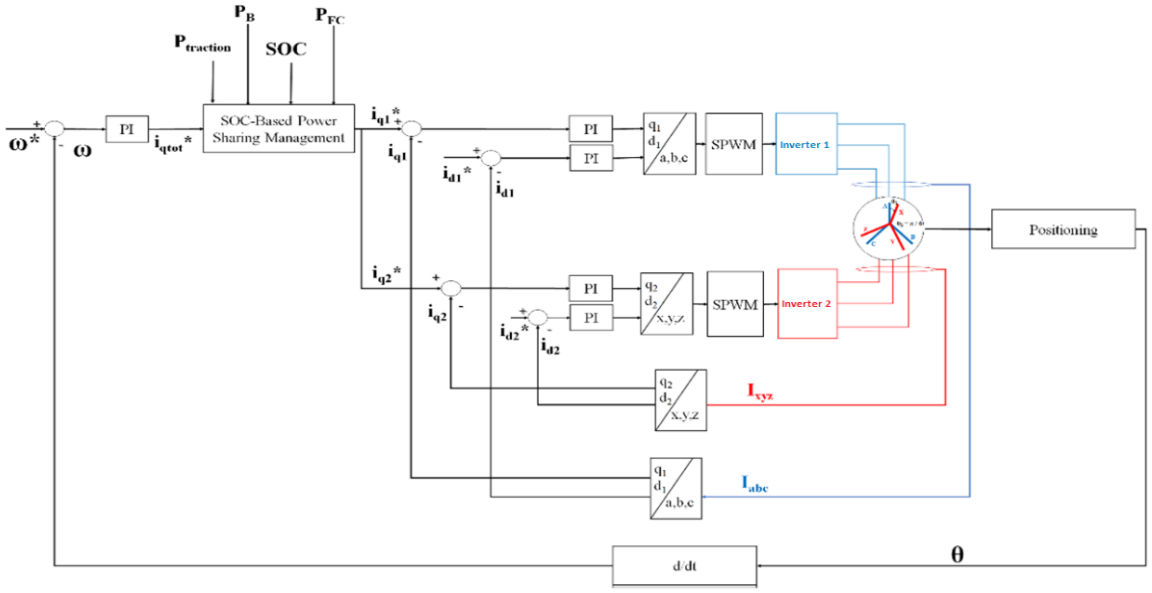

Fig. 1 The proposed drive traction system with the new power sharing management

The datasheet of Dockland Light Railway (DLR) with a simple route, which has no intermediate stations and gradient, is adopted to find average power of train. Consequently, fuel cell and battery power ratings have been decided with respect to the STS outcomes. After implementation of train dataset given in Table I on the STS, the train average power is found as around 20 kW for the specified route. Then this average power is used as reference in the new approach. The proposed updated sharing strategy is illustrated in Fig.2 in which the utilized parameters are defined in Table II.

Table I Datasheet of DTPMSM & Train

Rated Speed (RPM)	1500
Train Rated Speed (km/h)	50
Rated Torque (Nm)	700
Rated Power of Fuel Cell (kW)	20
Rated Power of Battery (kW)	90
Nominal Voltage	359
Nominal Current	191
Phase Resistance (Ω)	0.008
Ld and Lq Inductances (H)	0.005175
Md and Mq Inductances (H)	0.002691
Motor Moment of Inertia ($kg.m^2$)	50.065
FC / Average Power of Train (kW)	20
Train mass-m (tone)	150
Gear ratio -G	6
Wheel diameter-r (m)	0.6

Table II the parameters utilized in the proposed sharing approach

SOC	Battery state of charge
P_el	electromagnetic power of the motor
iqref	Total quadrant current before splitting the current amongst the two winding sets
Shared_iqref2	Shared quadrant current at the Battery side
Shared iqref1	Shared quadrant current at the Fuel Cell (FC) side
Fixed iqref1	Maximum quadrant current supplied from FC
Fixed iqref2	Equals (iqref - Fixed iqref1) which means shared iqref2 derived when FC provides its maximum current
P_Fuel Cell	Power of FC
w	Mechanical speed of the motor

Accordingly, the proposed algorithm shares the demanded traction power over the two power sources in terms of their reference quadrant currents iq1 and iq2 as follows:

1. Acceleration with low power demand (below the FC rated power):
   - The FC operates at its maximum to provide power to the train and then the rest of its power is used to charge the battery if the battery is not fully charged up to maximum battery SOC (80%)
   - The FC operates at demanded power to drive the motor when battery is fully charged (SOC $\geq$80%)

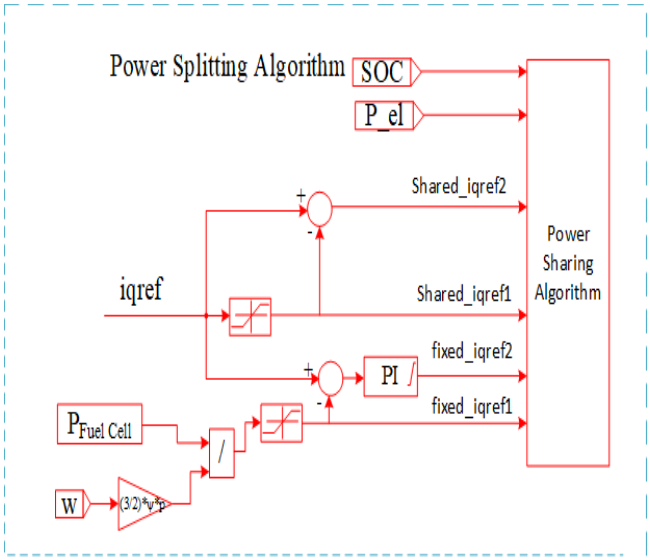

Fig. 2 New Power Splitting Approach

2. Then acceleration with higher power (more than FC rated power) demand, both FC and Battery supply power
   - Once SOC of battery reaches its minimum allowed level (20%), FC works at its maximum power to drive the motor and charge the battery with lower speed level due to the insufficient power level of FC.
3. After that, during the cruising mode, no much power required from train, FC will be then used to charge the battery if required
4. Finally, regarding the braking mode,
   - The braking power charges the battery while SOC is below its maximum rate (SOC<80%)
   - Braking resistors is used if braking is required to be dissipated while SOC is at its maximum (SOC≥80%)

The implementation of this algorithm allows to use power resources efficiently in independently supplying the DTPMSM. In addition, the size of converter unit of the motor is reduced owing to removal of DC/DC conversion step by using the motor windings to buffer and transfer the power between the two sources instead of the DC-link in the previous conventional topologies. Furthermore, the lifetime of battery and fuel cells are increased since their electrical specifications and ratings are taking into account in such smart sharing algorithm. The full demonstration of such power sharing management is provided in the flow chart of Fig. 3 where the algorithm checks the required traction power and then SOC respectively. Those two conditions are the main inputs for the proposed power sharing scheme. Accordingly, if the traction power is less than its estimated average power (20kW) and SOC of the battery cells is less than 20%, then the battery will go through the charging mode in which the fuel cell will support the traction demand as well as charging the battery cells. The charging will be then deactivated once the SOC becomes greater than 80% or the traction power becomes greater than its average power with SOC greater than 20%. On the other hand, during the discharging mode, the traction demand power is shared between the two power sources as presented in the flow chart of Fig.3.

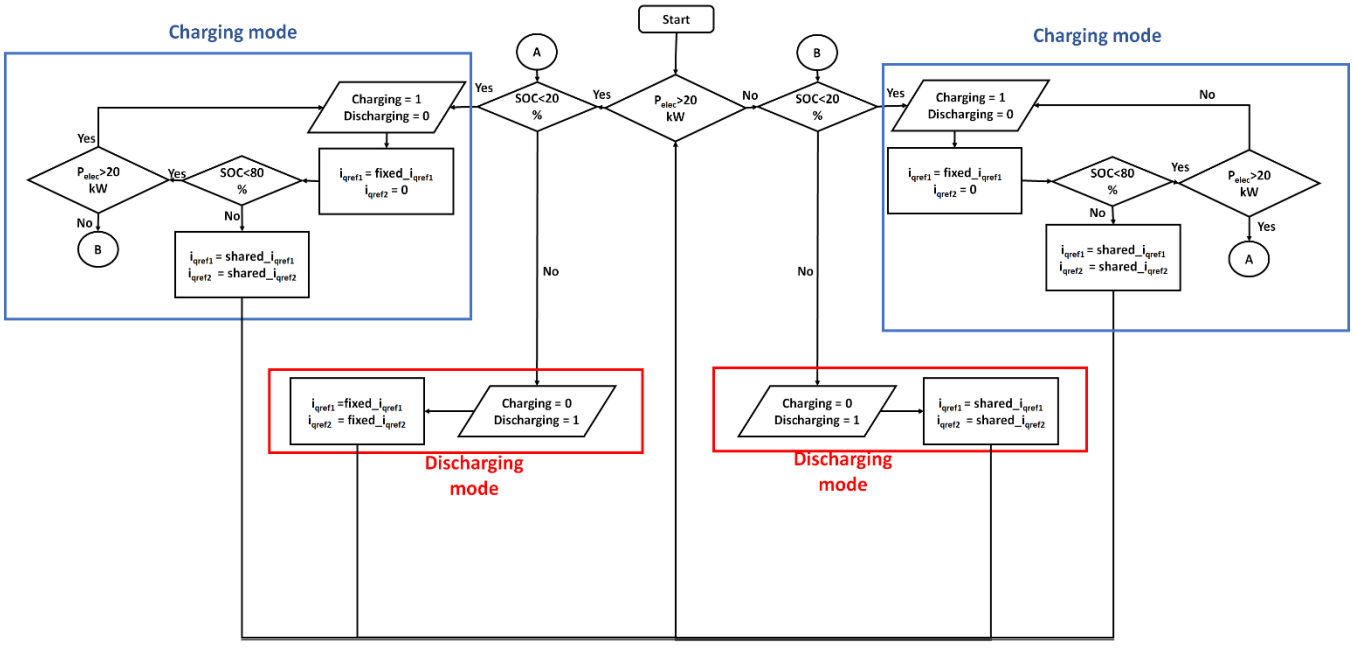

Fig.3 Flow Chart of New Power Sharing Approach

III. Simulation Results

Real-time simulator results of DTPMSM are presented in this section. The system under study is evaluated at different case studies to visualize the performance of the proposed control algorithm appropriately. Therefore, the simulation was run at low/high SOC conditions for both rated and half of rated speeds.

Fig. 4 shows the simulation results for the first operational mode of train at half of rated speed, where i_{q1} refers to quadrant FC current and i_{q2} stands for quadrant battery current. Fig.4 i-c and iii-c demonstrate SOC conditions (low and high respectively), while ii-b and iv-b shows battery quadrant current (i_{q2}) which is below the zero, i.e. the battery is charging from the FC, till its SOC reaches 80%. Due to operation at low speed given in i-b and iii-b, battery is not in use except at the initial period to accelerate the train, then FC supplies the power for both the motor and the battery as illustrated for i_{q1} in ii-a and iv-a. Under this case study, the battery is needed solely at the initial acceleration of the motor since the fuel cell current doesn't able to drive the motor at its rated torque. As a result, the battery is engaged in the beginning to provide the sufficient current for the motor rated torque. Once the rated torque and desired speed are achieved, the motor is then operating at lower torque based on the motor demand power. Accordingly, if the motor demand power is less than the fuel cell power, so the fuel cell becomes capable of driving the motor as well as charging the battery as shown in Fig.4 ii (a,b,c); i.e. i_{q1} (fuel cell current)=i_{qref} (total current)+i_{q2} (battery current), After that, once the battery SOC reaches 80%, its charging mode is deactivated and fuel cell is utilized only to drive the motor, Fig.4 iv (a,b,c); i.e. i_{q1}=i_{qref} while battery current tries to go zero although looks fluctuating in (Fig.4-iv.b).

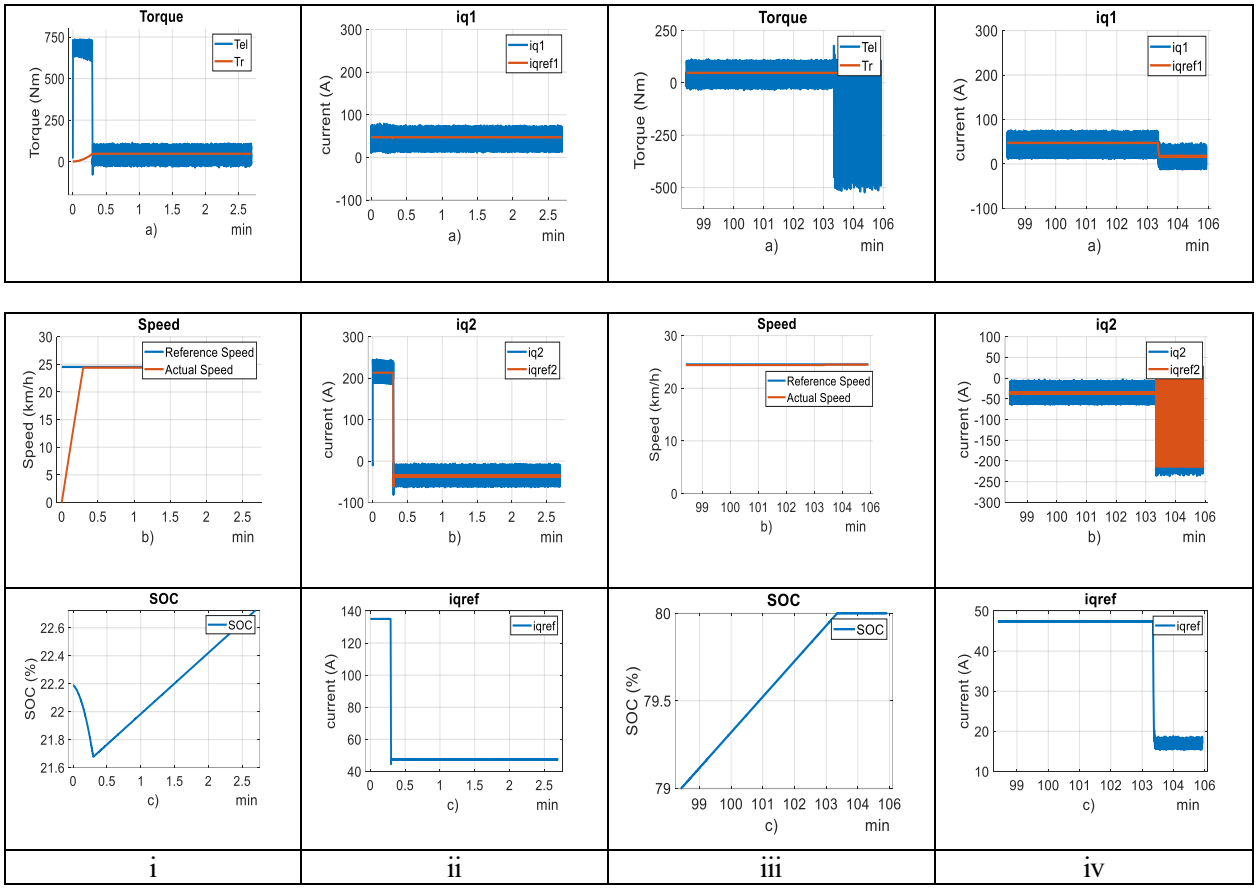

Fig. 4 Battery SOC and Current Sharing Under low power demand and Half of Rated Speed

The second operational mode of the train at rated speed is given in Fig.5. Firstly, train is accelerated with its rated speed (50 km/h). FC and battery are in use to accelerate the train up to reach the base speed then keep providing power on crusing mode since the required power demand is higher than the FC power. Once the battery reaches its minimum allowed charging state (20%), it is switched off to prevent fully depletion of battery. As stated earlier, FC cannot drive the motor and charge the battery by itself, due to the requirement of higher power. Hence, speed of the train is then reduced because of non-existence of battery. Afterwards, regenerative braking is activated around the 110th second as seen in Fig. 5 -i-b, negative power goes to battery side to charge it as given in Fig. 5 -ii-b.

After that FC is used at its maximum capacity to charge battery and drive the motor until reaching the maximum charging state which is 80% as seen in Fig.5 -iii-c. So, charging state is disabled and the power is then provided by only the FC Fig.5-iv-(a). Similarly, there are fluctuations in battery current when SOC reaches 80% as showm in Fig.5-iv-b

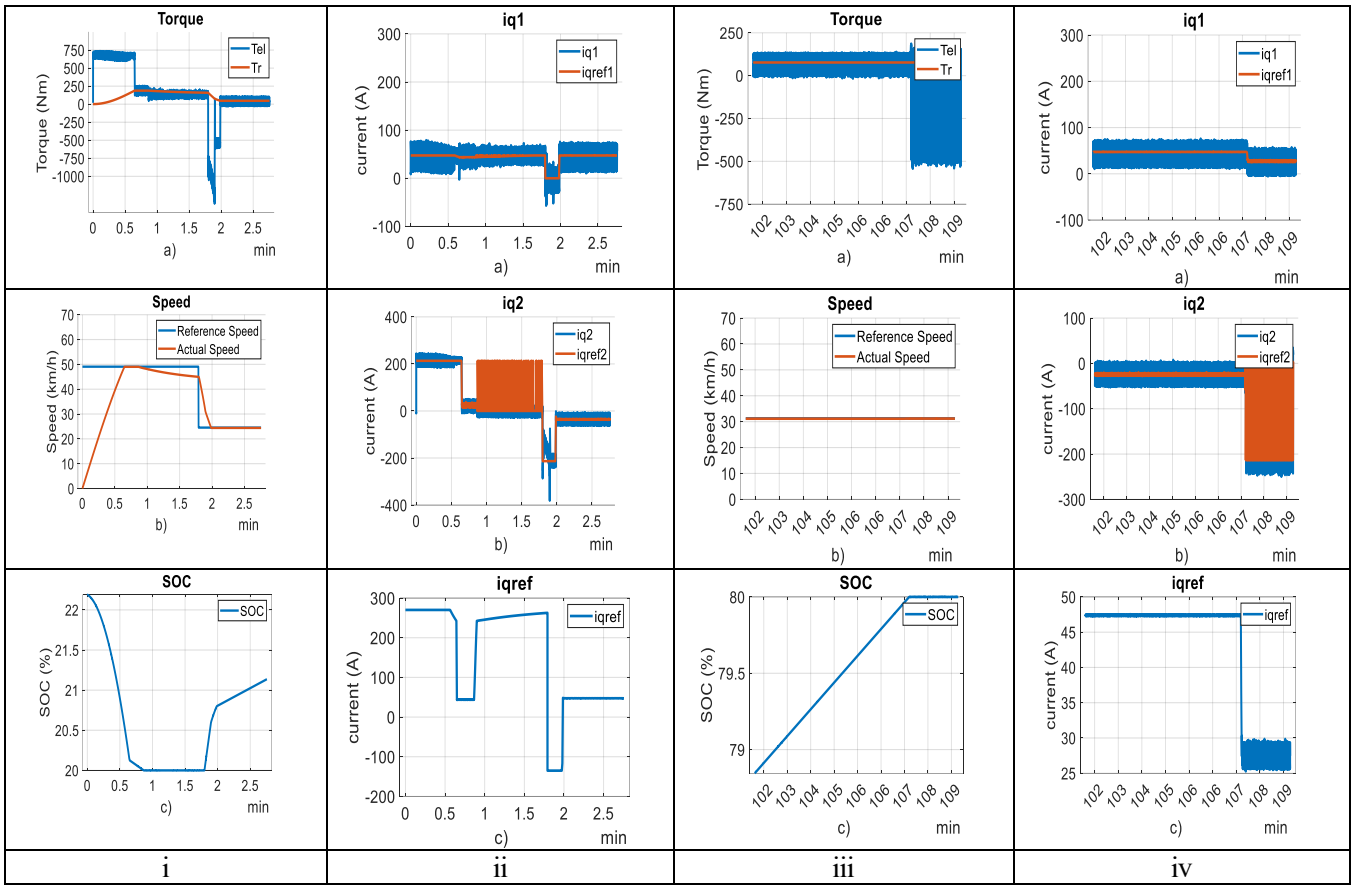

Fig. 5 Battery SOC and Current Sharing Under high power demand and at Rated Speed

IV. Conclusion

This study has investigated a new approach to share the traction demanded power of dual three-phase machine amongst the fuel and battery cells based on the battery SOC and traction average power. The results show that the requested power can be shared between the two DC power suppliers based on their capacity and the condition of the battery's SOC. The key design is the fuel cell rated power ought to meet at least the average power requirement of the traction demand in this study. Nevertheless, the FC power shall be overdesigned to drive the motor and charge the battery during the charging mode at rated speed. Otherwise, there is no way to utilise FC for these two purposes at the same time while train is in cruising mode. As a result, motor has run on below the rated speed when FC is designed for exactly the average power. Additionally, there is no energy recuperation during the regenerative braking into the FC because of the existence of a diode after the FC to block input power into the FC. However, there is an amount of current of i_{q2} is dropping below the zero during the regenerative braking as shown in Fig.5 ii-a. This current is measured at the motor winding set of the FC and will feed into the filtering circuit located between the FC and its crossponding winding.

Furthermore, the battery also is delivering the power while its SOC between 20 and 80% to protect it from fully depletion and overcharge situations. The capacity of battery is set to 45Ah for the single battery pack and single journey.

The FC meets the traction power demand when it is below or equal to the average train power, but it has to be supported by the battery in the initial period of the acceleration to meet with the torque requirements of the motor. Even though this will require to always discharge the battery when the machine is starting the acceleration, this will not have big impact on the battery SOC since this period lasts for few seconds only. Additionally, simplification of power converter units saves extra space and weight on-board by using inverters only. Finally, removal of inductors from power conditioning unit is also advantage to reduce the volume, weight, as well as cost.

References

[1] Y. Ruf, et al. "Study on the use of fuel cells and hydrogen in the railway environment." *Research report by Shift2Rail Joint Undertaking and Fuel Cells and Hydrogen Joint Undertaking*, 2019.

[2] M. Brenna, F. Foiadelli, and D. Zaninelli, Electrical Railway Transportation Systems, *New Jersey: IEEE Press Wiley*, 2018.

[3] Johannes Pagenkopf, Stefan Kaimer, "Potentials of Alternative Propulsion Systems for Railway Vehicles – A Techno-Economic Evaluation," in *Ninth International Conference on Ecological Vehicles and Renewable Energies (EVER),* 2014.

[4] E. Levi, "Multiphase electric machines for variable-speed applications," *IEEE Trans. Ind. Electron., vol. 55, no. 5, pp. 1893-1909,* 2008.

[5] R. Bojoi, S. Rubino, A. Tenconi, and S. Vaschetto, "Multiphase electrical machines and drives: A viable solution for energy generation and transportation electrification," in *Proc. International Conference and Exposition on Electrical and Power Engineering (EPE), pp. 632-639*., 2016

[6] J. Karttunen, S. Kallio, P. Peltoniemi, P. Silventoinen, and O. Pyrhonen, "Dual three-phase permanent magnet synchronous machine supplied by two independent voltage source inverters," in *Proc. Int. Symp. Power Electron., Electr. Drives, Autom. and Motion*, 2012, pp. 741-747.

[7] G. K. Singh, K. Nam, and S. K. Lim, "A simple indirect field-oriented control scheme for multiphase induction machine," *IEEE Trans. Ind. Electron., vol. 52, no. 4, pp. 1177-1184,* 2005.

[8] N. Polater, T. Kamel and P. Tricoli, "Control and Power Sharing Strategy of Dual Three-Phase Permanent Magnet Synchronous Motor for Light Railway Applications," in *2021 IEEE Vehicle Power and Propulsion Conference (VPPC),* Gijon, Spain, 2021.